SONARAY®

Lighting everyone's dreams

Our Mission

To create and contribute to a more intelligent and sustainable planet and a better human condition by offering innovative LED lighting solutions.

China

Americas

ORGANIZATION

SONARAY® is one of the most progressive LED lighting brands in a field that demands stringent quality and technical expertise. Our combination of experienced engineering, innovative thinking, and the best in raw materials allow us to produce exceptional quality industrial and commercial luminaires.

We are inspired not only to produce quality products but to improve the human condition – at work and in society. Our commitment to a cleaner and greener world is evident in our development and manufacturing facilities in both China and the United States. We collaborate as a global company, seeking to draw upon the best minds in LED technology and product development worldwide. Our goal is to produce lighting that is energy efficient and long lasting with the ultimate mission of leaving an indelible footprint on the world of tomorrow.

CONTENTS

08

LED LIGHT BAR

08

LED HIGH BAY

10

LED LOW BAY

10

LED FLOOD LIGHT

12

LED AREA LIGHTING

14

LED STREET LIGHT

17

LED SOLAR LUMINAIRE

18

LED PANEL

19

LED WALL PACK

20

LED HORTICULTURE LIGHTING

600/1200×50×50mm
23.62/47.24×1.97×1.97in

MATRIX² LED LIGHT BAR

IP54

Model No.	Power	Luminous Efficacy	Luminous Flux	Color Temperature	CRI	Beam Angle	Input Voltage	Length	Weight
	(W)	(lm/W)	(lm,Nominal)	(K)	(Ra)	(°)	(V)	(mm)	(kg/lb)
LB-1010A	10	133	1330	5000	≥80	93	100-277	600/23.62	1.2/2.65
LB-1018A	18	133	2394	5000	≥80	93	100-277	600/23.62	1.2/2.65
LB-1018B	18	133	2394	5000	≥80	93	100-277	1200/47.24	2/4.41
LB-1022B	22	133	2926	5000	≥80	93	100-277	1200/47.24	2/4.41
LB-1044B	44	133	5852	5000	≥80	93	100-277	1200/47.24	2/4.41

*Note: DLC listing applies to LB-1044B

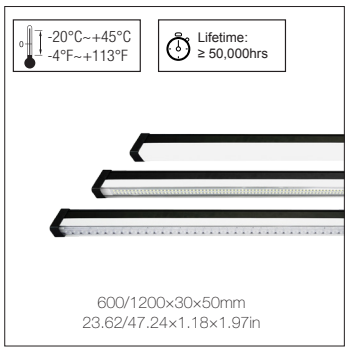

600/1200×30×50mm
23.62/47.24×1.18×1.97in

OBI LED LIGHT BAR

IP66 IK09

Model No.	Power	Diffuser	Luminous Efficacy	Luminous Flux	Color Temperature	CRI	Beam Angle	Input Voltage	Length	Weight
	(W)		(lm/W)	(lm,Nominal)	(K)	(Ra)	(°)	(V)	(mm/in)	(kg/lb)
LB-4030	30	Lens	112	3360	5000	≥80	30	100-277	600/23.62	0.91/2
LB-4030	30	Lens	110	3300	5000	≥80	60	100-277	600/23.62	0.91/2
LB-4030	30	Frosted	147	4410	5000	≥80	110	100-277	600/23.62	0.91/2
LB-4030	30	Clear	162	4860	5000	≥80	130	100-277	600/23.62	0.91/2
LB-4030	30	Frosted	147	4410	5000	≥80	110	100-277	1200/47.24	1.59/3.51
LB-4030	30	Clear	162	4860	5000	≥80	130	100-277	1200/47.24	1.59/3.51
LB-4050	50	Lens	115	5750	5000	≥80	30	100-277	1200/47.24	1.59/3.51
LB-4050	50	Lens	110	5500	5000	≥80	60	100-277	1200/47.24	1.59/3.51
LB-4050	50	Frosted	143	7150	5000	≥80	110	100-277	1200/47.24	1.59/3.51
LB-4050	50	Clear	160	8000	5000	≥80	130	100-277	1200/47.24	1.59/3.51
LB-4060	60	Lens	110	6600	5000	≥80	30	100-277	1200/47.24	1.59/3.51
LB-4060	60	Lens	105	6300	5000	≥80	60	100-277	1200/47.24	1.59/3.51
LB-4060	60	Frosted	141	8460	5000	≥80	110	100-277	1200/47.24	1.59/3.51
LB-4060	60	Clear	159	9540	5000	≥80	130	100-277	1200/47.24	1.59/3.51

Φ495mm /19.49in

ICE BREAKER LED HIGH BAY

IP65 IK09

Model No.	Power	Luminous Efficacy	Luminous Flux	Color Temperature	CRI	Beam Angle	Input Voltage	Fixture Height	Weight
	(W)	(lm/W)	(lm,Delivered)	(K)	(Ra)	(°)	(V)	(mm/in)	(kg/lb)
HB-2085LW	85	116	9860	5000	≥70	100	100-277	369/14.53	3.7/8.16
HB-2100LW	100	122	12,200	5000	≥70	100	100-277	389/15.3	4/8.82

ICE BREAKER LED HIGH BAY

IP65 IK09

Model No.	Power	Luminous Efficacy	Luminous Flux	Color Temperature	CRI	Beam Angle	Input Voltage	Fixture Height	Weight
	(W)	(lm/W)	(lm,Delivered)	(K)	(Ra)	(°)	(V)	(mm)	(kg/lb)
HB-2150LW	150	113	16,950	5000	≥70	100	100-240/277	397/15.63	5.2/11.46
HB-2200LW	200	117	23,400	5000	≥70	100	100-240/277	422/16.61	6.2/13.67

ICE BREAKER LED HIGH BAY

IP65 IK09

Model No.	Power	Luminous Efficacy	Luminous Flux	Color Temperature	CRI	Beam Angle	Input Voltage	Fixture Height	Weight
	(W)	(lm/W)	(lm,Delivered)	(K)	(Ra)	(°)	(V)	(mm/in)	(kg/lb)
HB-2250LW	250	111	27,750	5000	≥70	100	100-240/277	456/17.95	8.4/18/.52

Accessories for Ice Breaker High Bays

Accessories	Item No.	Compatible Models
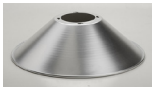 **Empire reflector**	HB-2000A-V	HB-2000LW full series
Bell-shaped reflector	HB-2000A-W	HB-2000LW full series
Clear reflector	HB-2000L-A	HB-2000LW full series

Accessories	Item No.	Compatible Models
Diffuser With (1) cover ring	HB-2000A-G	HB-2000A-V
Diffuser With (4) clips and (1) safety wire	HB-2001A-X	HB-2000A-V
Metal Chain	HB-2000A-I	ø 4 mm, Made of iron, chromate finishing, customized length
Removable Link	HB-2000A-J	ø 5mm, Made of iron, chromate finishing

*Note: Easy Interchange System (EIS), is our “plug and use” removable power supply design that makes maintenance simple and easy. It takes 5 minutes to replace a driver and requires only a screwdriver. You can greatly reduce maintenance costs and truly enhance the lifetime of the fixture at minimal cost.

335×335×225mm
13.19×13.19×8.86in

DELTA LED HIGH BAY (EIS)

IP65 IK09

Model No.	Power	Luminous Efficacy	Luminous Flux	Color Temperature	CRI	Beam Angle	Input Voltage	Weight
	(W)	(lm/W)	(lm,Nominal)	(K)	(Ra)	(°)	(V)	(kg/lb)
HB-3150A	150	115	17,250	5000	≥80	60	100-277	5/11.02
HB-3150A	150	115	17,250	5000	≥80	90	100-277	5/11.02
HB-3150A	150	115	17,250	5000	≥80	120	100-277	5/11.02

300×300×405mm
11.81×11.81×15.94in

DELTA LED HIGH BAY (EIS)

IP65 IK09

Model No.	Power	Luminous Efficacy	Luminous Flux	Color Temperature	CRI	Beam Angle	Input Voltage	Weight
	(W)	(lm/W)	(lm,Nominal)	(K)	(Ra)	(°)	(V)	(kg/lb)
HB-3250A	250	115	28,750	5000	≥80	60	100-277	9.7/21.38
HB-3250A	250	115	28,750	5000	≥80	90	100-277	9.7/21.38
HB-3250A	250	115	28,750	5000	≥80	120	100-277	9.7/21.38

325×310×145mm
12.8×12.21×5.71in

DELTA LED LOW BAY

IP65 IK07

Model No.	Power	Luminous Efficacy	Luminous Flux	Color Temperature	CRI	Beam Angle	Input Voltage	Weight
	(W)	(lm/W)	(lm,Nominal)	(K)	(Ra)	(°)	(V)	(kg/lb)
LW-1040	40	105	4200	6000	≥80	120	100-277	3.2/7.05
LW-1060	60	105	6300	6000	≥80	120	100-277	3.2/7.05
LW-1080	80	105	8400	6000	≥80	120	100-277	3.5/7.42

*Note: DLC listing applies to LW-1060.

1015×145×95mm
39.96×5.71×3.74in

DELTA LED LOW BAY

IP65 IK07

Model No.	Power	Luminous Efficacy	Luminous Flux	Color Temperature	CRI	Beam Angle	Input Voltage	Weight
	(W)	(lm/W)	(lm,Nominal)	(K)	(Ra)	(°)	(V)	(kg/lb)
LWL-1040	40	105	4200	6000	≥80	120	100-277	3.3/7.28
LWL-1060	60	105	6300	6000	≥80	120	100-277	3.3/7.28
LWL-1080	80	105	8400	6000	≥80	120	100-277	3.3/7.28

*Note: UL listing applies to LWL-1080.

*Note: Easy Interchange System (EIS), is our “plug and use” removable power supply design that makes maintenance simple and easy. It takes 5 minutes to replace a driver and requires only a screwdriver. You can greatly reduce maintenance costs and truly enhance the lifetime of the fixture at minimal cost.

DELTA LED FLOOD LIGHT

IP65 IK09

Model No.	Power	Luminous Efficacy	Luminous Flux	Color Temperature	CRI	Beam Angle	Input Voltage	Weight
	(W)	(lm/W)	(lm,Nominal)	(K)	(Ra)	(°)	(V)	(kg/lb)
FL-3030	30	115	3450	5000	≥80	120	100-277	1.2/2.65

DELTA LED FLOOD LIGHT

IP65 IK09

Model No.	Power	Luminous Efficacy	Luminous Flux	Color Temperature	CRI	Beam Angle	Input Voltage	Weight
	(W)	(lm/W)	(lm,Nominal)	(K)	(Ra)	(°)	(V)	(kg/lb)
FL-3040	40	115	4600	5000	≥80	60	100-277	2.4/5.29
FL-3040	40	115	4600	5000	≥80	90	100-277	2.4/5.29
FL-3040	40	115	4600	5000	≥80	120	100-277	2.4/5.29

DELTA LED FLOOD LIGHT

IP65 IK09

Model No.	Power	Luminous Efficacy	Luminous Flux	Color Temperature	CRI	Beam Angle	Input Voltage	Weight
	(W)	(lm/W)	(lm,Nominal)	(K)	(Ra)	(°)	(V)	(kg/lb)
FL-3060	60	115	6900	5000	≥80	60	100-277	2.48/5.47
FL-3060	60	115	6900	5000	≥80	90	100-277	2.48/5.47
FL-3060	60	115	6900	5000	≥80	120	100-277	2.48/5.47

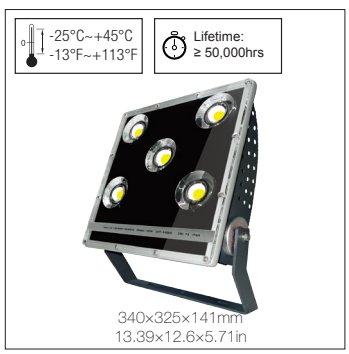

DELTA LED FLOOD LIGHT (EIS*)

IP65 IK09

Model No.	Power	Luminous Efficacy	Luminous Flux	Color Temperature	CRI	Beam Angle	Input Voltage	Weight
	(W)	(lm/W)	(lm,Nominal)	(K)	(Ra)	(°)	(V)	(kg/lb)
FL-3100A	100	115	11,500	3000	≥80	90	100-277	5.4/11.9
FL-3100A	100	115	11,500	5000	≥80	90	100-277	5.4/11.9
FL-3150A	150	115	17,250	3000	≥80	90	100-277	5.4/11.9
FL-3150A	150	115	17,250	5000	≥80	90	100-277	5.4/11.9

*Note: Easy Interchange System (EIS), is our “plug and use” removable power supply design that makes maintenance simple and easy. It takes 5 minutes to replace a driver and requires only a screwdriver. You can greatly reduce maintenance costs and truly enhance the lifetime of the fixture at minimal cost.

DELTA LED FLOOD LIGHT

IP65 IK09

Model No.	Power	Luminous Efficacy	Luminous Flux	Color Temperature	CRI	Beam Angle	Input Voltage	Weight
	(W)	(lm/W)	(lm,Nominal)	(K)	(Ra)	(°)	(V)	(kg/lb)
FL-3250	250	115	28,750	5000	≥80	60	100-277	9/19.84
FL-3250	250	115	28,750	5000	≥80	90	100-277	9/18.84
FL-3250	250	115	28,750	5000	≥80	120	100-277	9/18.84

DELTA LED FLOOD LIGHT

IP65 IK09

Model No.	Power	Luminous Efficacy	Luminous Flux	Color Temperature	CRI	Beam Angle	Input Voltage	Weight
	(W)	(lm/W)	(lm,Nominal)	(K)	(Ra)	(°)	(V)	(kg/lb)
FL-3520	520	115	59,800	5000	≥80	70	100-277	23/50.71
FL-3520	520	115	59,800	5000	≥80	90	100-277	23/50.71
FL-3520	520	115	59,800	5000	≥80	120	100-277	23/50.71

EPSILON LED AREA LIGHTING

IP65 IK08

Model No.	Power	Luminous Efficacy	Luminous Flux	Color Temperature	CRI	Beam Angle	Input Voltage	Weight
	(W)	(lm/W)	(lm,Nominal)	(K)	(Ra)	(°)	(V)	(kg/lb)
FL-3250N	250	115	28,750	5000	≥80	18	100-277	8.7/19.18
FL-3250N	250	123	30,750	5000	≥80	28	100-277	8.7/19.18
FL-3250N	250	118	29,500	5000	≥80	40	100-277	8.7/19.18

EPSILON LED AREA LIGHTING

IP65 IK08

Model No.	Power	Luminous Efficacy	Luminous Flux	Color Temperature	CRI	Beam Angle	Input Voltage	Weight
	(W)	(lm/W)	(lm,Nominal)	(K)	(Ra)	(°)	(V)	(kg/lb)
FL-3520N	520	115	59,800	5000	≥80	18	100-277	21.3/48.98
FL-3520N	520	115	59,800	5000	≥80	28	100-277	21.3/48.98
FL-3520N	520	115	59,800	5000	≥80	40	100-277	21.3/48.98

EPSILON LED AREA LIGHTING

IP65 IK08

Model No.	Power	Luminous Efficacy	Luminous Flux	Color Temperature	CRI	Beam Angle	Input Voltage	Weight
	(W)	(lm/W)	(lm,Nominal)	(K)	(Ra)	(°)	(V)	(kg/lb)
FL-41000N	1000	115	115,000	5000	≥80	18	100-277	44.2/97.44
FL-41000N	1000	115	115,000	5000	≥80	28	100-277	44.2/97.44
FL-41000N	1000	115	115,000	5000	≥80	40	100-277	44.2/97.44

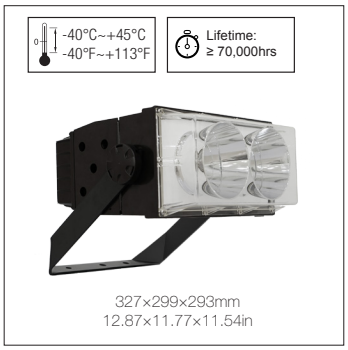

EXPLORER LED AREA LIGHTING (VAC)

IP65 IK09

Model No.	Power	Luminous Efficacy	Luminous Flux	Color Temperature	CRI	Beam Angle	Input Voltage	Weight
	(W)	(lm/W)	(lm,Delivered)	(K)	(Ra)	(°)	(V)	(kg/lb)
FL-5080	80	99	7920	5000	≥80	8	AC120-277	6/13.23
FL-5080	80	135	10,800	5000	≥70	17	AC120-277	6/13.23
FL-5080	80	141	11,280	5000	≥70	34	AC120-277	6.1/13.45
FL-5080	80	120	9600	5000	≥70	62	AC120-277	6.1/13.45
FL-5080	80	156	12,480	5000	≥70	88	AC120-277	6.2/13.67
FL-5160	160	77	12,320	5000	≥80	8	AC120-277	6.5/14.33
FL-5160	160	122	19,520	5000	≥70	17	AC120-277	6.5/14.33
FL-5160	160	129	20,640	5000	≥70	34	AC120-277	6.6/14.55
FL-5160	160	110	17,600	5000	≥70	62	AC120-277	6.6/14.55
FL-5160	160	141	22,560	5000	≥70	88	AC120-277	6.7/14.77

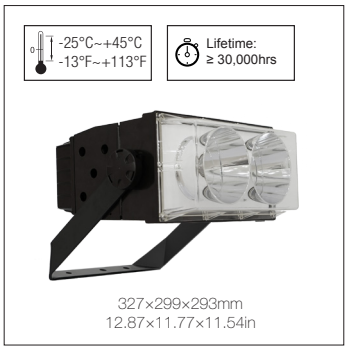

EXPLORER LED AREA LIGHTING (VDC)

IP65 IK09

Model No.	Power	Luminous Efficacy	Luminous Flux	Color Temperature	CRI	Beam Angle	Input Voltage	Weight
	(W)	(lm/W)	(lm,Delivered)	(K)	(Ra)	(°)	(V)	(kg/lb)
FL-5080	80	99	7920	5000	≥80	8	DC12-24	6/13.23
FL-5080	80	112	8960	5000	≥70	17	DC12-24	6/13.23
FL-5080	80	119	9520	5000	≥70	34	DC12-24	6.1/13.45
FL-5080	80	101	8080	5000	≥70	62	DC12-24	6.1/13.45
FL-5080	80	127	10,160	5000	≥70	88	DC12-24	6.2/13.67
FL-5160	160	83	13,280	5000	≥80	8	DC12-24	6.5/14.33
FL-5160	160	92	14,720	5000	≥70	17	DC12-24	6.5/14.33
FL-5160	160	96	15,360	5000	≥70	34	DC12-24	6.6/14.55
FL-5160	160	81	12,960	5000	≥70	62	DC12-24	6.6/14.55
FL-5160	160	103	16,480	5000	≥70	88	DC12-24	6.7/14.77

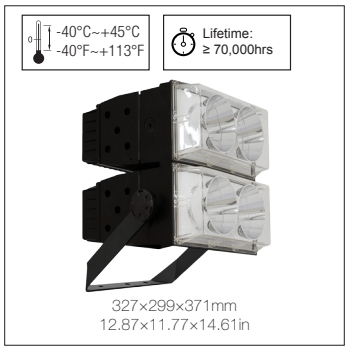

EXPLORER LED AREA LIGHTING

IP65 IK09

Model No.	Power	Luminous Efficacy	Luminous Flux	Color Temperature	CRI	Beam Angle	Input Voltage	Weight
	(W)	(lm/W)	(lm,Delivered)	(K)	(Ra)	(°)	(V)	(kg/lb)
FL-5320	320	77	24,640	5000	≥80	8	120-277	13/28.66
FL-5320	320	121	38,720	5000	≥70	17	120-277	13/28.66
FL-5320	320	128	40,960	5000	≥70	34	120-277	13.2/29.1
FL-5320	320	107	34,240	5000	≥70	62	120-277	13.2/29.1
FL-5320	320	137	43,840	5000	≥70	88	120-277	13.4/29.54

EXPLORER LED AREA LIGHTING

IP65 IK09

Model No.	Power	Luminous Efficacy	Luminous Flux	Color Temperature	CRI	Beam Angle	Input Voltage	Weight
	(W)	(lm/W)	(lm,Delivered)	(K)	(Ra)	(°)	(V)	(kg/lb)
FL-5480	480	76	36,480	5000	≥80	8	120-277	19.5/42.99
FL-5480	480	121	58,080	5000	≥70	17	120-277	19.5/42.99
FL-5480	480	127	60,960	5000	≥70	34	120-277	19.8/43.65
FL-5480	480	107	51,360	5000	≥70	62	120-277	19.8/43.65
FL-5480	480	134	64,320	5000	≥70	88	120-277	20.1/44.31

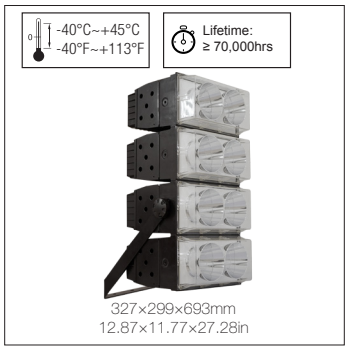

EXPLORER LED AREA LIGHTING

IP65 IK09

Model No.	Power	Luminous Efficacy	Luminous Flux	Color Temperature	CRI	Beam Angle	Input Voltage	Weight
	(W)	(lm/W)	(lm,Delivered)	(K)	(Ra)	(°)	(V)	(kg/lb)
FL-5640	640	76	48,640	5000	≥80	8	120-277	26/57.32
FL-5640	640	121	77,440	5000	≥70	17	120-277	26/57.32
FL-5640	640	126	80,640	5000	≥70	34	120-277	26.4/58.2
FL-5640	640	106	67,840	5000	≥70	62	120-277	26.4/58.2
FL-5640	640	133	85,120	5000	≥70	88	120-277	26.8/59.08

DELTA LED STREET LIGHT

IP65

Model No.	Power	Luminous Efficacy	Luminous Flux	Color Temperature	CRI	Beam Angle	Input Voltage	Weight
	(W)	(lm/W)	(lm,Nominal)	(K)	(Ra)	(°)	(V)	(kg/lb)
ST-4030	30	115	3450	5000	≥80	120	100-277	2/4.41

DELTA LED STREET LIGHT (EIS)

IP65 IK08

Model No.	Power	Luminous Efficacy	Luminous Flux	Color Temperature	CRI	Beam Angle	Input Voltage	Weight
	(W)	(lm/W)	(lm,Nominal)	(K)	(Ra)	(°)	(V)	(kg/lb)
ST-3060A	60	115	6900	5000	≥80	145°(H) × 65°(V)	100-277	3.9/8.6

DELTA LED STREET LIGHT (EIS)

IP65 IK08

Model No.	Power	Luminous Efficacy	Luminous Flux	Color Temperature	CRI	Beam Angle	Input Voltage	Weight
	(W)	(lm/W)	(lm,Nominal)	(K)	(Ra)	(°)	(V)	(kg/lb)
ST-3090A	90	115	10,350	5000	≥80	145°(H) × 65°(V)	100-277	6.3/13.89
ST-3120A	120	115	13,800	5000	≥80	145°(H) × 65°(V)	100-277	6.3/13.89

DELTA LED STREET LIGHT (EIS)

IP65 IK08

Model No.	Power	Luminous Efficacy	Luminous Flux	Color Temperature	CRI	Beam Angle	Input Voltage	Weight
	(W)	(lm/W)	(lm,Nominal)	(K)	(Ra)	(°)	(V)	(kg/lb)
ST-3200A	200	115	23,000	5000	≥80	145°(H) × 65°(V)	100-277	9.7/21.36

DELTA LED STREET LIGHT

IP65 IK08

Model No.	Power	Luminous Efficacy	Luminous Flux	Color Temperature	CRI	Beam Angle	Input Voltage	Weight
	(W)	(lm/W)	(lm,Nominal)	(K)	(Ra)	(°)	(V)	(kg/lb)
ST-2060	60	115	6900	5000	≥80	145°(H) × 65°(V)	100-277	2.8/6.17

*Note: Easy Interchange System (EIS), is our “plug and use” removable power supply design that makes maintenance simple and easy. It takes 5 minutes to replace a driver and requires only a screwdriver. You can greatly reduce maintenance costs and truly enhance the lifetime of the fixture at minimal cost.

DELTA LED STREET LIGHT

IP65 IK08

Model No.	Power	Luminous Efficacy	Luminous Flux	Color Temperature	CRI	Beam Angle	Input Voltage	Weight
	(W)	(lm/W)	(lm,Nominal)	(K)	(Ra)	(°)	(V)	(kg/lb)
ST-2120	120	115	13,800	5000	≥80	145°(H) × 65°(V)	100-277	4/8.82

DELTA LED STREET LIGHT

IP65 IK08

Model No.	Power	Luminous Efficacy	Luminous Flux	Color Temperature	CRI	Beam Angle	Input Voltage	Weight
	(W)	(lm/W)	(lm,Nominal)	(K)	(Ra)	(°)	(V)	(kg/lb)
ST-2200	200	115	23,000	5000	≥80	145°(H) × 65°(V)	100-277	7/15.43

DELTA LED STREET LIGHT (*EIS*)

IP65 IK08

Model No.	Power	Luminous Efficacy	Luminous Flux	Color Temperature	CRI	Beam Angle	Input Voltage	Weight
	(W)	(lm/W)	(lm,Nominal)	(K)	(Ra)	(°)	(V)	(kg/lb)
ST-2060A	60	115	6900	5000	≥80	145°(H) × 65°(V)	100-277	3.9/8.6

DELTA LED STREET LIGHT (*EIS*)

IP65 IK08

Model No.	Power	Luminous Efficacy	Luminous Flux	Color Temperature	CRI	Beam Angle	Input Voltage	Weight
	(W)	(lm/W)	(lm,Nominal)	(K)	(Ra)	(°)	(V)	(kg/lb)
ST-2120A	120	115	13,800	5000	≥80	145°(H) × 65°(V)	100-277	5.2/11.46

*Note: Easy Interchange System (EIS), is our “plug and use” removable power supply design that makes maintenance simple and easy. It takes 5 minutes to replace a driver and requires only a screwdriver. You can greatly reduce maintenance costs and truly enhance the lifetime of the fixture at minimal cost.

DELTA LED STREET LIGHT (EIS)

IP65 IK08

Model No.	Power	Luminous Efficacy	Luminous Flux	Color Temperature	CRI	Beam Angle	Input Voltage	Weight
	(W)	(lm/W)	(lm,Nominal)	(K)	(Ra)	(°)	(V)	(kg/lb)
ST-2200A	200	115	23,000	5000	≥80	145°(H) × 65°(V)	100-277	8.1/17.86

DELTA SOLAR LED STREET LUMINAIRE

IP65 IK07

Model No.	Luminaire Power	Solar Panel Power	Luminous Efficacy	Luminous Flux	Color Temperature	CRI	Beam Angle	Solar Panel Weight	Luminaire Weight
	(W)	(W)	(lm/W)	(lm)	(K)	(Ra)	(°)	(kg/lb)	(kg/lb)
SR-1020	20	40	100	2000	6000	≥80	120	3.5/7.72	2.58/5.69

***Lighting Duration:** 30hrs
****Time to fully charge:** 8hrs

Note: *The duration refers to the time for which the luminaire could work continually with the battery fully charged.
** The time refers to the duration in which the battery could be fully charged under sufficient illumination of the solar panel.

DELTA SOLAR LED STREET LUMINAIRE

IP65 IK07

Model No.	Luminaire Power	Solar Panel Power	Luminous Efficacy	Luminous Flux	Color Temperature	CRI	Beam Angle	Solar Panel Weight	Luminaire Weight
	(W)	(W)	(lm/W)	(lm)	(K)	(Ra)	(°)	(kg/lb)	(kg/lb)
SR-1030	30	60	106	3180	6000	≥80	120	4/8.82	2.59/5.71

***Lighting Duration:** 30hrs
****Time to fully charge:** 8hrs

Note: *The duration refers to the time for which the luminaire could work continually with the battery fully charged.
** The time refers to the duration in which the battery could be fully charged under sufficient illumination of the solar panel.

DELTA SOLAR LED STREET LUMINAIRE

IP65 IK08

Model No.	Luminaire Power	Solar Panel Power	Luminous Efficacy	Luminous Flux	Color Temperature	CRI	Beam Angle	Solar Panel Weight	Luminaire Weight
	(W)	(W)	(lm/W)	(lm)	(K)	(Ra)	(°)	(kg/lb)	(kg/lb)
SR-1048	48	90	78	3744	6000	≥80	145°(H) × 65°(V)	14/30.86	2/4.41

***Lighting Duration:** 40hrs
****Time to fully charge:** 9hrs

Note: *The duration refers to the time for which the luminaire could work continually with the battery fully charged.
** The time refers to the duration in which the battery could be fully charged under sufficient illumination of the solar panel.

*Note: Easy Interchange System (EIS), is our “plug and use” removable power supply design that makes maintenance simple and easy. It takes 5 minutes to replace a driver and requires only a screwdriver. You can greatly reduce maintenance costs and truly enhance the lifetime of the fixture at minimal cost.

DELTA SOLAR LED STREET LUMINAIRE

IP65 IK08

Model No.	Luminaire Power	Solar Panel Power	Luminous Efficacy	Luminous Flux	Color Temperature	CRI	Beam Angle	Solar Panel Weight	Luminaire Weight
	(W)	(W)	(lm/W)	(lm)	(K)	(Ra)	(°)	(kg/lb)	(kg/lb)
SR-1080	80	150	105	8400	6000	≥80	145°(H) × 65°(V)	18/39.68	4/8.82

***Lighting Duration:** 40hrs
****Time to fully charge:** 9hrs

Note: *The duration refers to the time for which the luminaire could work continually with the battery fully charged.
** The time refers to the duration in which the battery could be fully charged under sufficient illumination of the solar panel.

INTEGRATED SOLAR LED LUMINAIRE

Model No.	Luminaire Power	Solar Panel Power	Luminous Efficacy	Luminous Flux	*Lighting Duration	**Time to Full Charge	Color Temperature	CRI	Beam Angle	Weight
	(W)	(W)	(lm/W)	(lm)	(hrs)	(hrs)	(K)	(Ra)	(°)	(kg/lb)
SR-1004	4	10	56	224	15	7	6000	≥80	120	1.65/3.64

Note: *The duration refers to the time for which the luminaire could work continually with the battery fully charged.
** The time refers to the duration in which the battery could be fully charged under sufficient illumination of the solar panel.

INTEGRATED SOLAR LED LUMINAIRE

Model No.	Luminaire Power	Solar Panel Power	Luminous Efficacy	Luminous Flux	*Lighting Duration	**Time to Full Charge	Color Temperature	CRI	Beam Angle	Weight
	(W)	(W)	(lm/W)	(lm)	(hrs)	(hrs)	(K)	(Ra)	(°)	(kg/lb)
SR-1010	10	20	63	630	17	7~8	6000	≥80	120	4.7/10.36

Note: *The duration refers to the time for which the luminaire could work continually with the battery fully charged.
** The time refers to the duration in which the battery could be fully charged under sufficient illumination of the solar panel.

LED PANEL

Model No.	Power	Luminous Efficacy	Luminous Flux	Color Temperature	CRI	Beam Angle	Input Voltage	Weight
	(W)	(lm/W)	(lm)	(K)	(Ra)	(°)	(V)	(kg/lb)
MB-2040AB-111	40	117	4680	5000	≥80	120	100-277	5/11.02
MB-2040AB-113	40	113	4520	4000	≥80	120	100-277	5/11.02

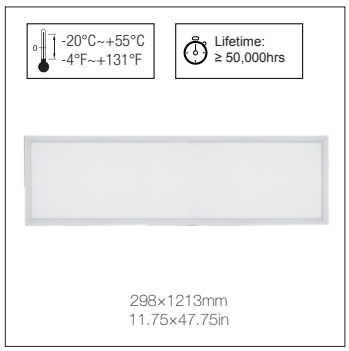

LED PANEL

Model No.	Power	Luminous Efficacy	Luminous Flux	Color Temperature	CRI	Beam Angle	Input Voltage	Weight
	(W)	(lm/W)	(lm)	(K)	(Ra)	(°)	(V)	(kg/lb)
MB-3040AB-111	40	100	4000	5000	≥80	120	100-277	4.5/9.92
MB-3040AB-113	40	97	3880	4000	≥80	120	100-277	4.5/9.92

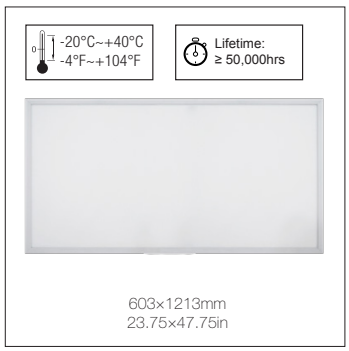

LED PANEL

Model No.	Power	Luminous Efficacy	Luminous Flux	Color Temperature	CRI	Beam Angle	Input Voltage	Weight
	(W)	(lm/W)	(lm)	(K)	(Ra)	(°)	(V)	(kg/lb)
MB-2060AB-111	52	107	5600	5000	≥80	120	120-277	8.8/19.4
MB-2060AB-113	52	104	5408	4000	≥80	120	120-277	8.8/19.4

LED WALL PACK

Model No.	Power	Luminous Efficacy	Luminous Flux	Color Temperature	CRI	Beam Angle	Input Voltage	Weight
	(W)	(lm/W)	(lm)	(K)	(Ra)	(°)	(V)	(kg/lb)
WP-5060-111	60	90	5400	5000	≥75	110°x130°	100-277	3.59/7.92
WP-5080-111	80	90	7200	5000	≥75	110°x130°	100-277	3.59/7.92
WP-5100-111	100	90	9000	5000	≥75	110°x130°	100-277	3.59/7.92
WP-5120-111	120	90	10,800	5000	≥75	110°x130°	100-277	3.59/7.92
WP-5150-111	150	90	13,500	5000	≥75	110°x130°	100-277	3.59/7.92

c UL us IP65 IK09

Model No.	Power	Light Source	Emitted Color Options	Beam Angle	Input Voltage	Weight	Operating Temperature	Dimensions
	(W)	(Pcs)		(°)	(V)	(kg/lb)		(mm/in)
GL-3150	150	4	Red / White	90° / 140°	100-277	4.3/9.48	-25°C~+45°C -13°F~+113°F	500×180×110 19.69×7.09×4.33

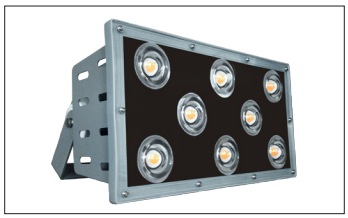

c UL us IP65 IK09

Model No.	Power	Light Source	Emitted Color Options	Beam Angle	Input Voltage	Weight	Operating Temperature	Dimensions
	(W)	(Pcs)		(°)	(V)	(kg/lb)		(mm/in)
GL-3300	300	8	Red / White	90° / 140°	100-277	6.5/14.33	-25°C~+45°C -13°F~+113°F	410×215×150 16.14×8.46×5.91

c UL us IP65 IK09

Model No.	Power	Light Source	Emitted Color Options	Beam Angle	Input Voltage	Weight	Operating Temperature	Dimensions
	(W)	(Pcs)		(°)	(V)	(kg/lb)		(mm/in)
GL-3500	500	12	Red / White	90° / 140°	100-277	13.1/28.88	-25°C~+45°C -13°F~+113°F	440×300×260mm 17.32×11.81×10.24in

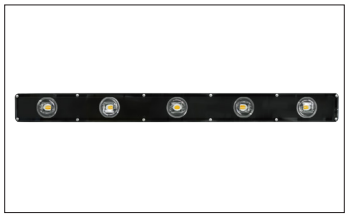

IP65 IK09

Model No.	Power	Light Source	Emitted Color Options	Beam Angle	Input Voltage	Weight	Operating Temperature	Dimensions
	(W)	(Pcs)		(°)	(V)	(kg/lb)		(mm/in)
GL-3060	60	5	Red / White	90° / 140°	100-277	2.6/5.73	-25°C~+45°C -13°F~+113°F	1000×90×60 39.37×3.54×2.36

Plant Growth Required Spectrum

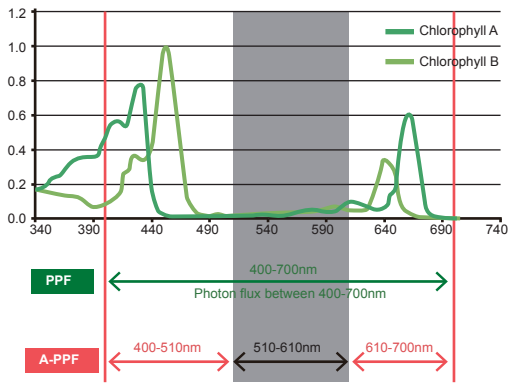

Effects of Different Radiation Wavelengths on Plants

		Wavelength	To the plant
Solar Radiation	Ultraviolet	200-275nm	UVC is harmful to plants and animals, and causes plants' stomata to close and reduces photosynthesis.
		275-320nm	UVB can cause dwarfing in plants and skin aging.
		320-400nm	UVA is conducive to the coloring of plants.
	Visible light	400-510nm	Blue-purple light has high photosynthetic efficiency that helps in plants' growth. It is also good for fruits' coloration and synthesizing Vitamin C.
		510-610nm	Green light has a low absorption rate and so low photosynthetic efficiency for plants.
		610-720nm	Red and orange light have high absorption rates and high photosynthetic efficiency.
	Infrared	700-800nm	Far red can affect biological rhythms of plants, which fosters inflorescence and helps in the development of seeds and fruit.
		1000-3000nm	Provides radiation heat.

Electric Lighting Spectrum VS Plant Growth Spectrum

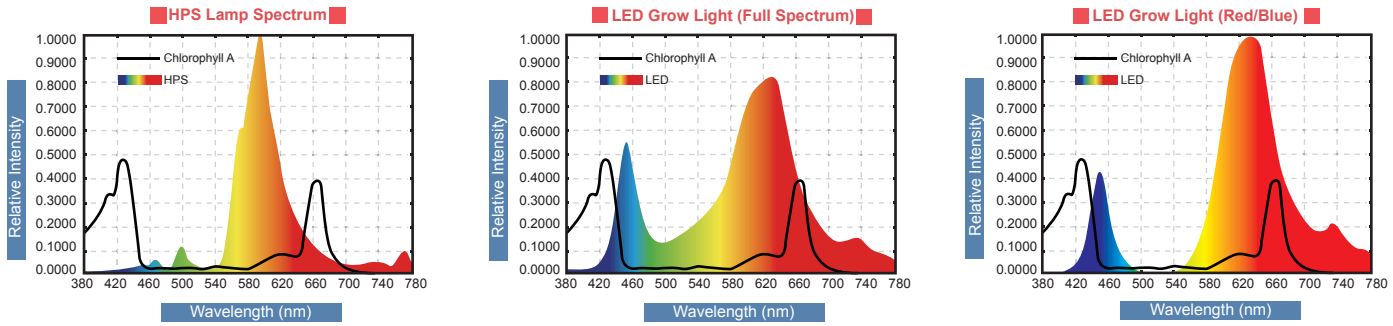

PPF

Photosynthectic Photon Flux (μmol/s).

PPF is the total amount of micromoles emitted from a fixture. It is measured in micromoles per second, or μmol/s.

PPF is measuring photons, similar to lumens in general lighting.

PPFD

Photosynthetic Photon Flux Density (μmol/s-m^2).

PPFD is the amount of micromoles landing on a specific area. It is measured in micromoles per second per square meter, or μmol/s-m^2.

PPFD is akin to measuring foot-candles or lux in general lighting.

Plant Growth Curve Under Different Lights (Harvest 130g)

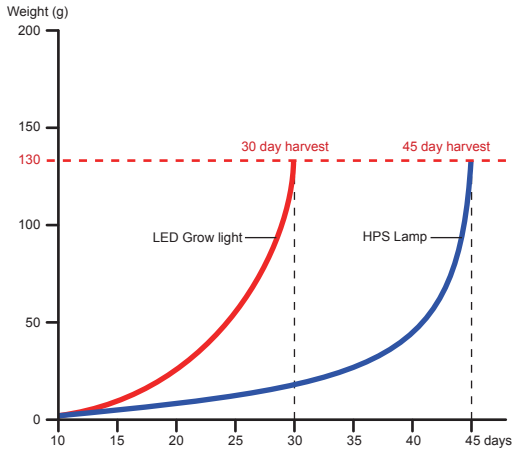

500W Grow Light, 90° (PPFD)

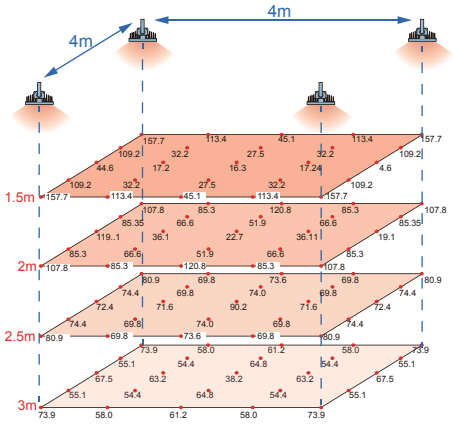

600W HPS (PPFD)

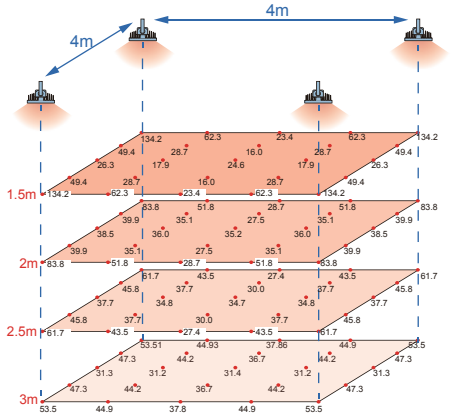

ABOUT US

DASCOM maintains as a core company value that successful businesses have an ethical obligation to give back to, and be involved in, their community. DASCOM Americas contributes to the greater good of its community at large by not only investing in jobs, technology, and people, but by also supporting various charitable organizations. This takes the form of monetary and equipment donations to local food pantries, regional food banks, and Ronald McDonald House® Charities, among others.

In addition, DASCOM Holdings maintains close strategic partnerships and relationships with other leading international businesses. One such long-standing relationship is with Citizen Electronics Company, Ltd., a worldwide diversified business entity whose global footprint includes work in the world of high efficacy LED chip sets. DASCOM uses Citizen CITILED® in a number of its products and combines their exceptional quality with proficiency in research and development to produce and market SONARAY™ LED Lighting.

SONARAY™ was originally begun as DASCOM Lighting in 2008, and as the business unit grew it evolved into its own brand with a distinct name. SONARAY™ is a combination of the Spanish word “soñar,” which means “to dream,” and the English word “ray,” which means a narrow beam of light. SONARAY™ is a name that is meant to inspire dreams of a cleaner and greener world, better clarity of light, and enhanced energy savings for businesses and other organizations.

SONARAY™ is the culmination of acute focus on quality, precise engineering, forward thinking, ingenuity, and creativity. Like the core tenets of the company, the brand is designed to create value for clients and assist in maintaining a more sustainable planet by changing the world of tomorrow with our actions each and every day.

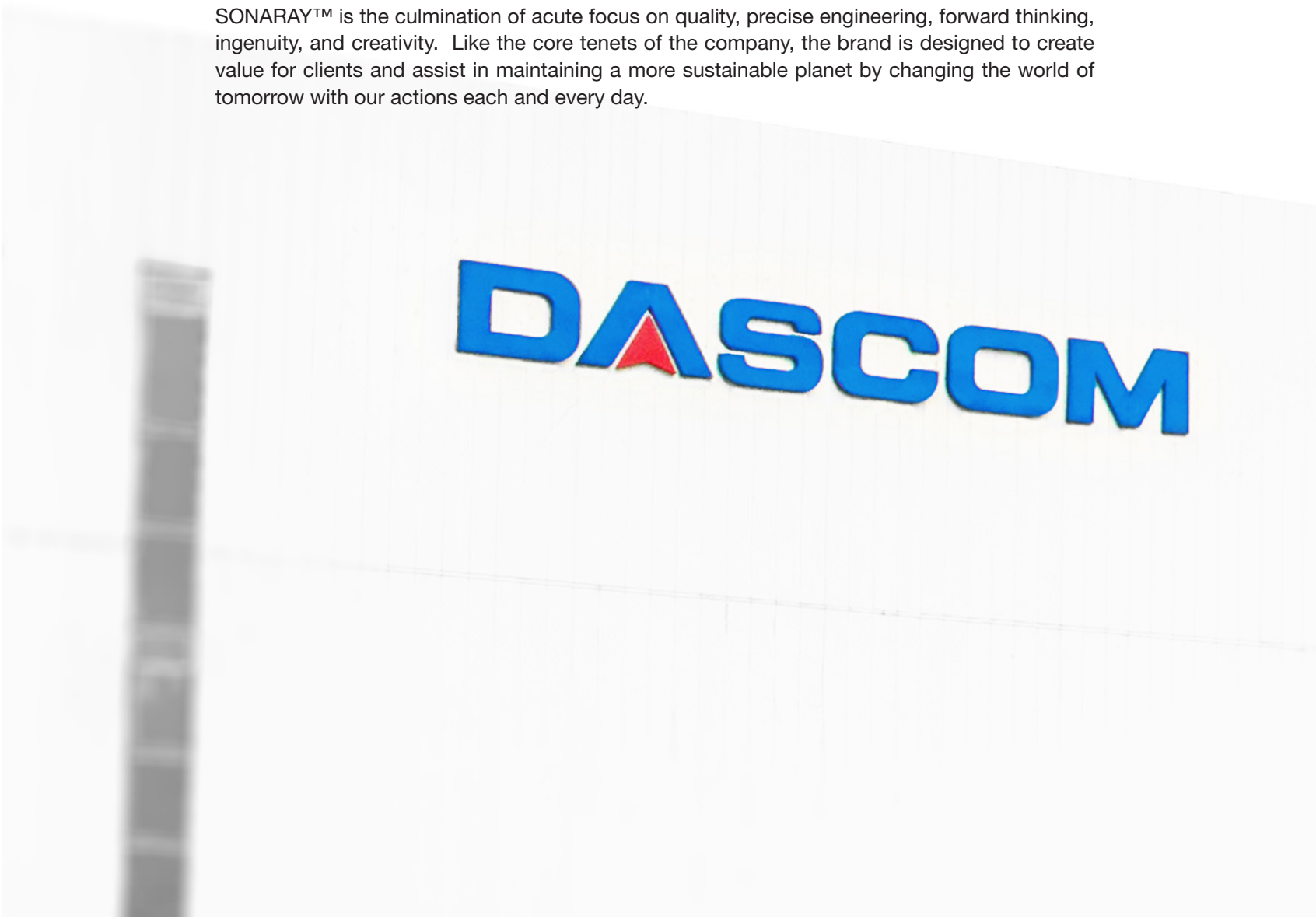

SONARAY LED

GLOBAL FACILITIES

Factory Warehouse

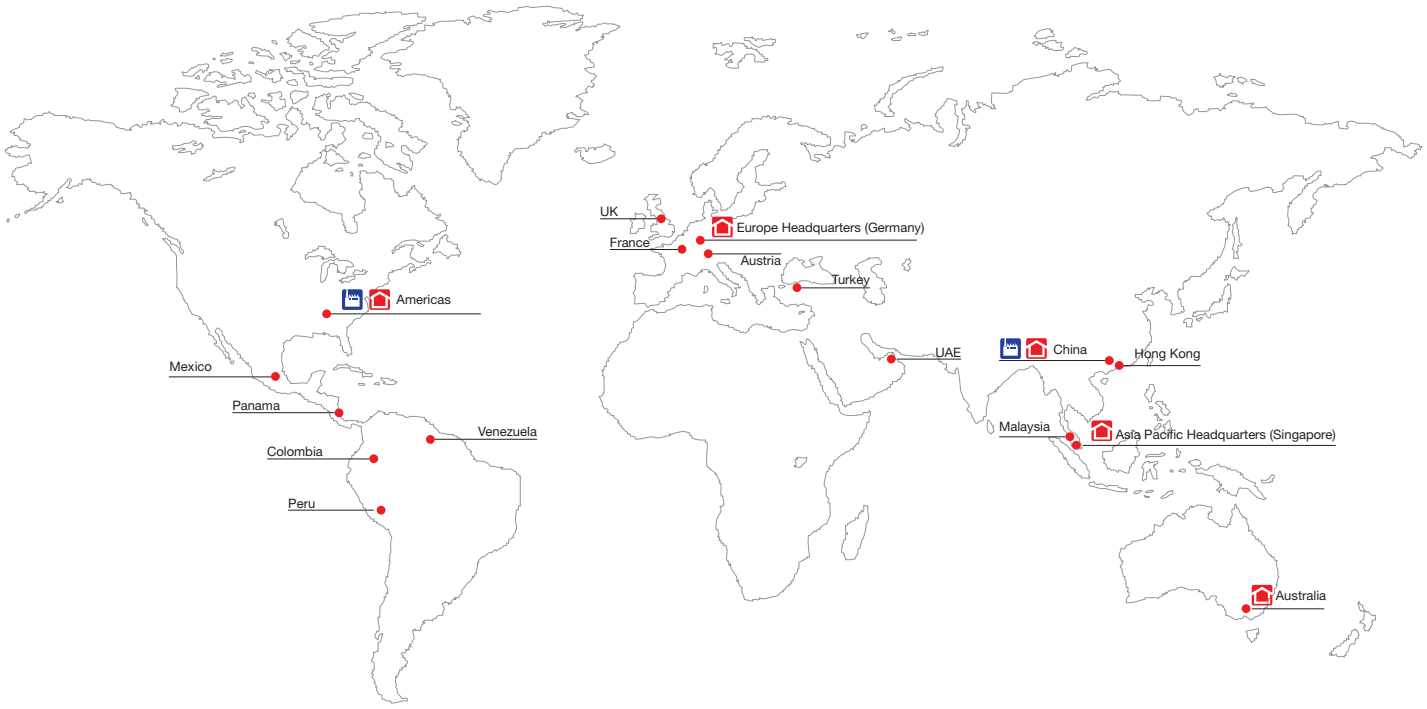

Americas
34 Lakeview Ct.
Verona, VA 24482
USA
Tel: +1-877-434-1377
Fax: +1-877-334-0549

Europe
Heuweg 3,
89079 Ulm,
Germany
Tel: +49 -731-20750
Fax: +49 -731-2075100

China
No.399,Jinxing Road,
Jianghai District,
Jiangmen,
Guangdong, P.R. China
Tel: 400-810-9998 800-810-9998

Asia Pacific Headquarters (Singapore)
21 Bukit Batok Crescent,
#29-81 WCEGA Tower,
Singapore 658065
Tel: +65-67608833
Fax: +65-67601066

Hong Kong
Unit 3, 26th Floor,
Honour Industrial Centre,
No. 6 Sun Yip Street, Chaiwan,
Hong Kong
Tel: +852-21109011
Fax: +852-21109012

Malaysia
Global Business & Convention Centre,
Block B, Level 2, Unit 2C
No.8, Jalan 19/1, Section 19,
46300 Petaling Jaya, Selangor,
Malaysia
Tel : +60-3-79571788
Fax: +60-3-79574788

Australia
Unit 7,21 Westside Drive
Laverton North,
VIC 3026,
Australia
Tel: +(03) 93151377

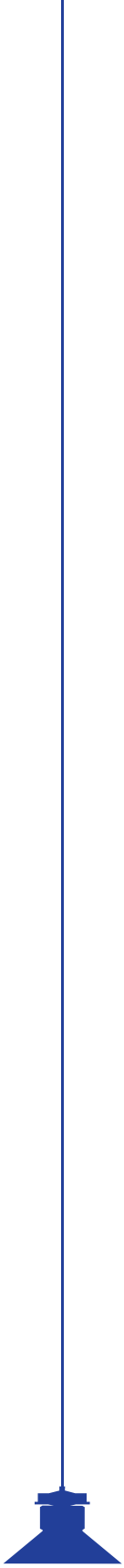

SONARAY®

© 2017 DASCOM (HOLDINGS), LTD. All rights reserved.
All company and product names are trademarks or registered trademarks of their respective owner. Specifications are subject to change without notice.

www.sonarayled.com